NOTICE DE MONTAGE

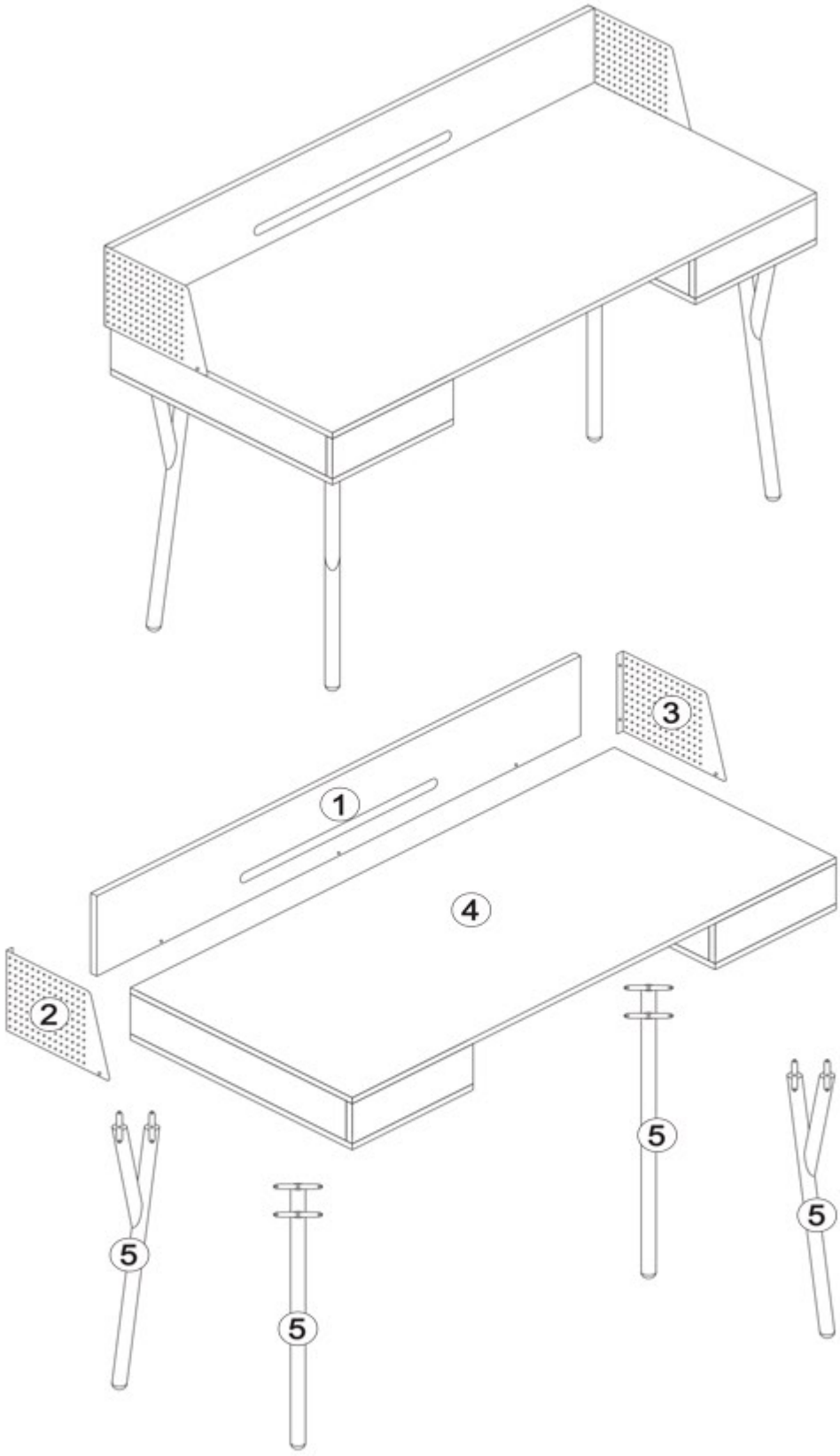

Ax16	Bx3	Cx8	Dx1
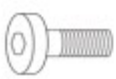			
6x12mm	4x30mm	4x12mm	

1

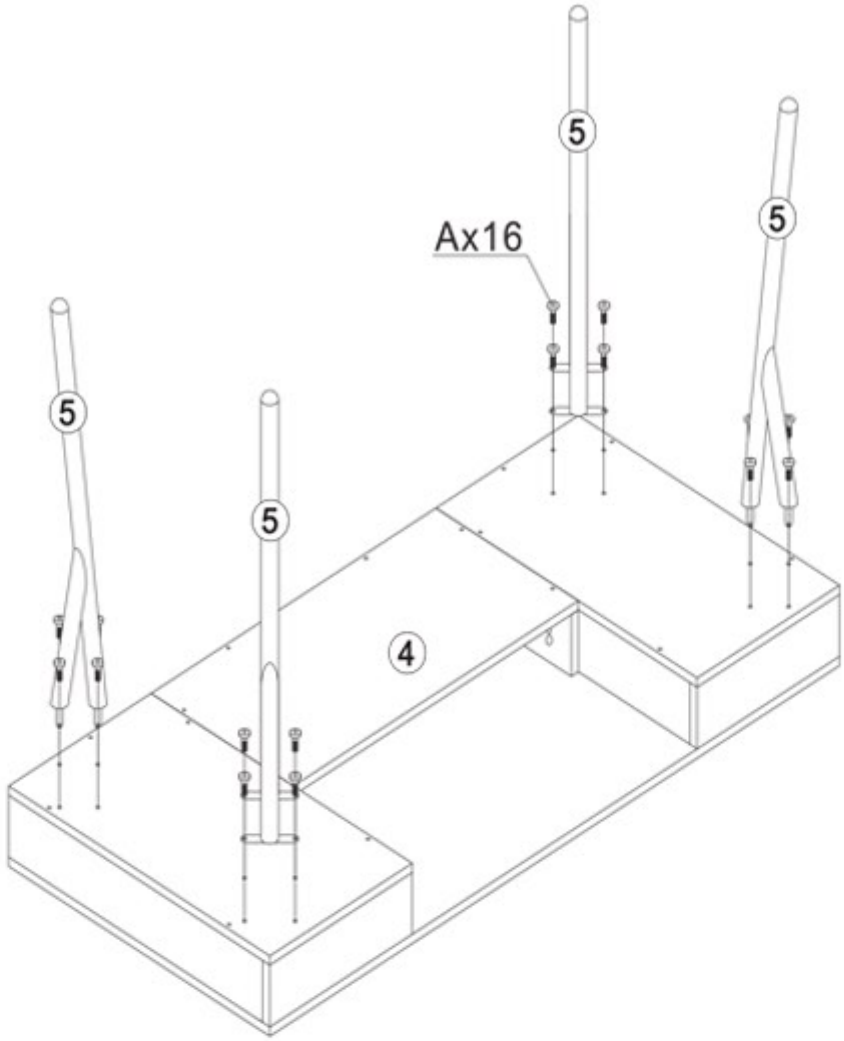

2

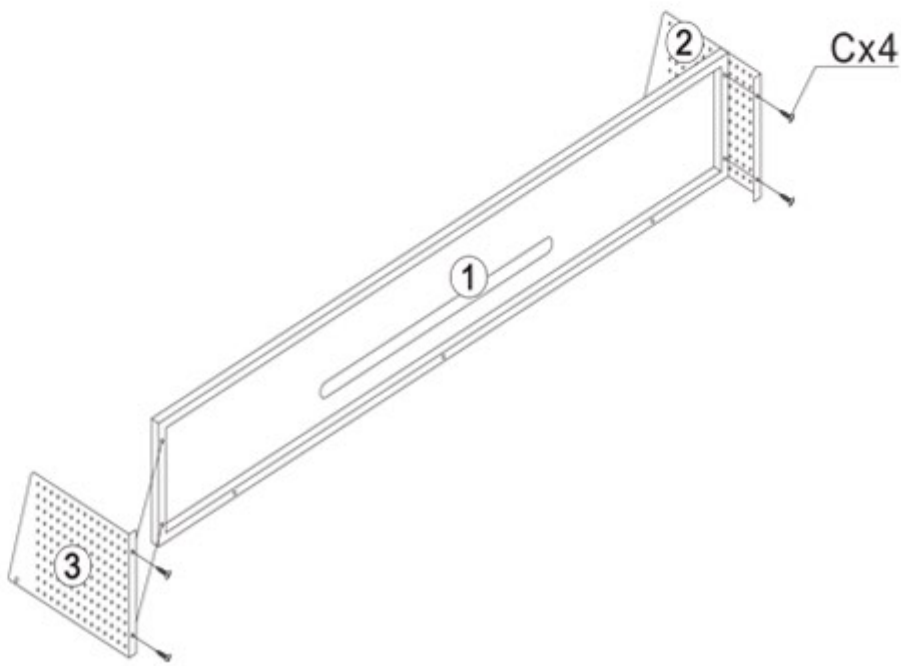

3

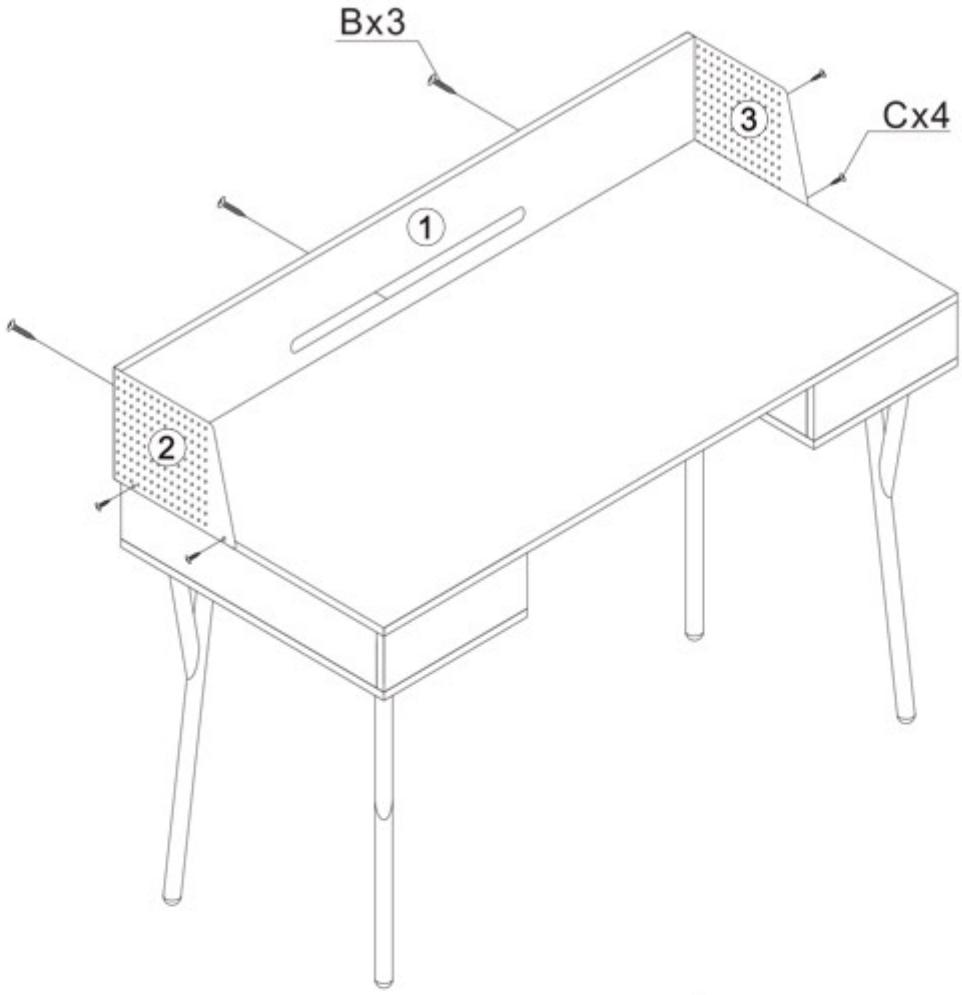
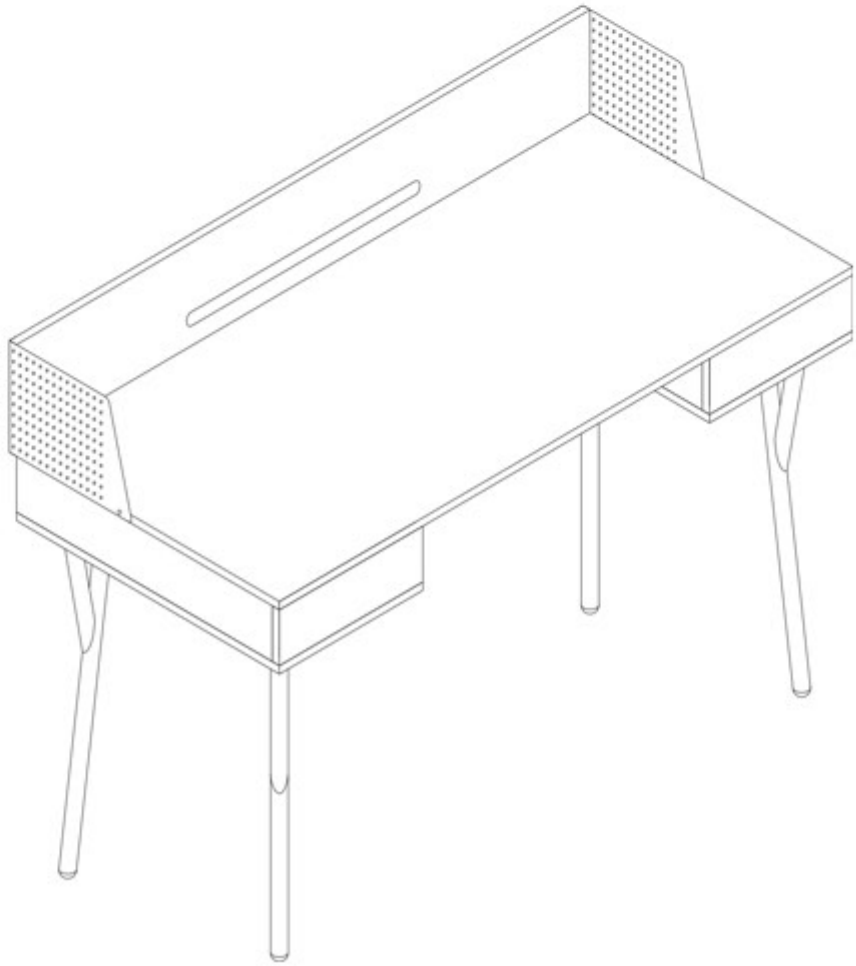
4